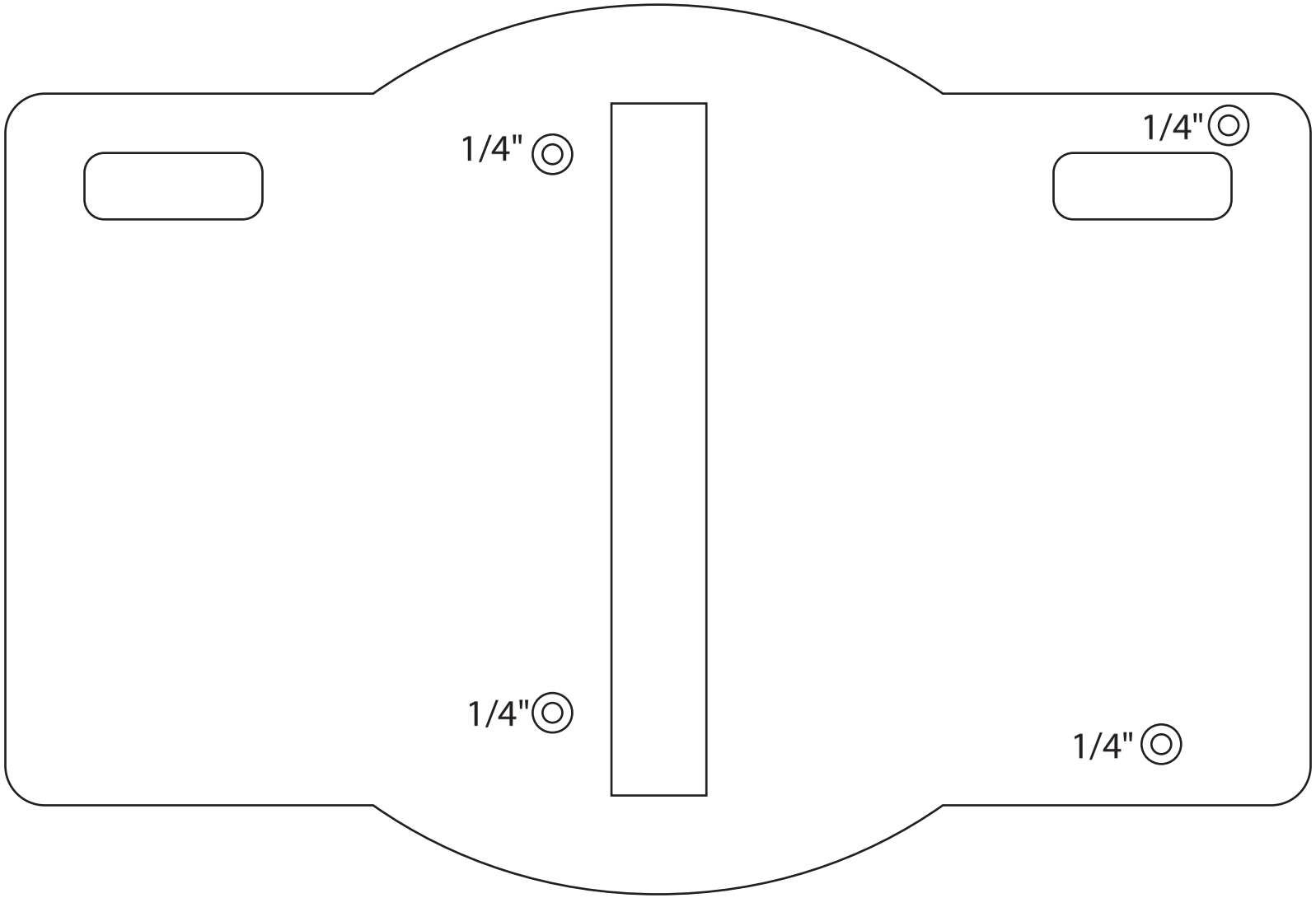
1/4"
1/4"
1/4"
1/4"